Angled surface socket

- Products group CEE Norm
- plug-in / plug-socket plug-socket
- Body type Angled surface socket
- Ip class IP 67
- Body material polyamid 6
- conductive meterial Ms 58
- weight gr. 270
- Box pieces 2
- packages pieces 36
- Product number BC1-3103-7535

Volt	24V
Amper	32A
Hertz	50Hz - 60Hz
Pole	2P+E
Saat Yönü	

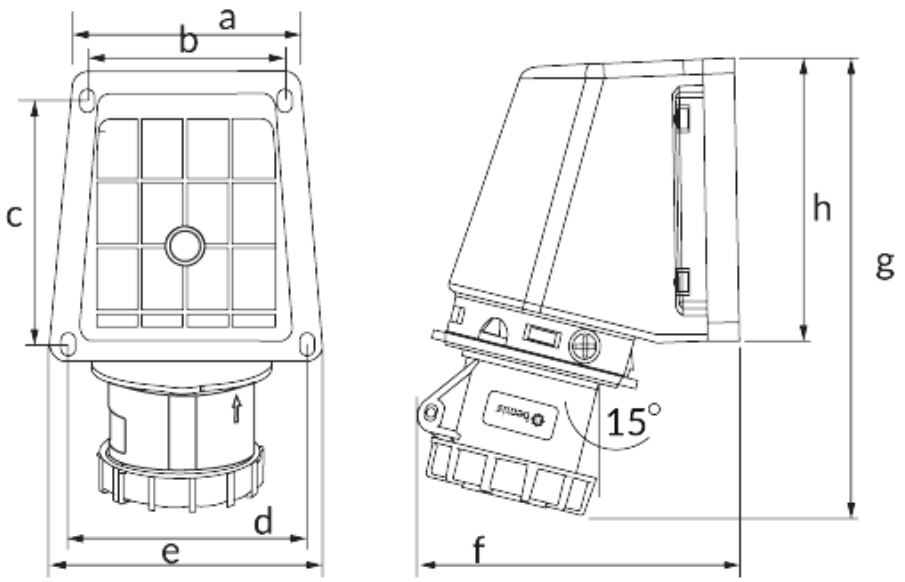

Ölçüler / Dimensions (mm)			
a	78	e	87
b	64	f	108
c	76	g	165
d	78	h	87

http://www.bemis.com.tr/Urunler/detay/1179/angled_surface_socket.html